Robot Arm Prototype

Student: Kevin Tu Ung
Mentor: Professor Neha Kardam
Program: Electronics Technology
Institution: Lake Washington Institute Of Technology

Abstract

The goal of this study is to create a robot arm prototype by designing and printing most of the parts using a 3D printer. The parts used in this study were modeled using a computer-aided design tool called Fusion 360 and then translated into printable files using Ultimaker Cura, a 3D model slicing program. The robot arm prototype is designed to allow users to operate the arm manually, increasing the performance and result of specific tasks by minimizing the risk of human error. The robot arm is designed in such a way that each component, including the key hardware body parts and the software on the robot's device, is accessible to users for modification. Several issues emerged during the construction, such as damaged pieces during 3D printing and dimensions converting. Overall, the robot arm prototype can be operated manually and execute selected tasks, and it is open to changes

Objectives

- Research fundamental robotic arm concepts
- Create a prototype robot arm by designing and fabricating 3D printed components.

Methods

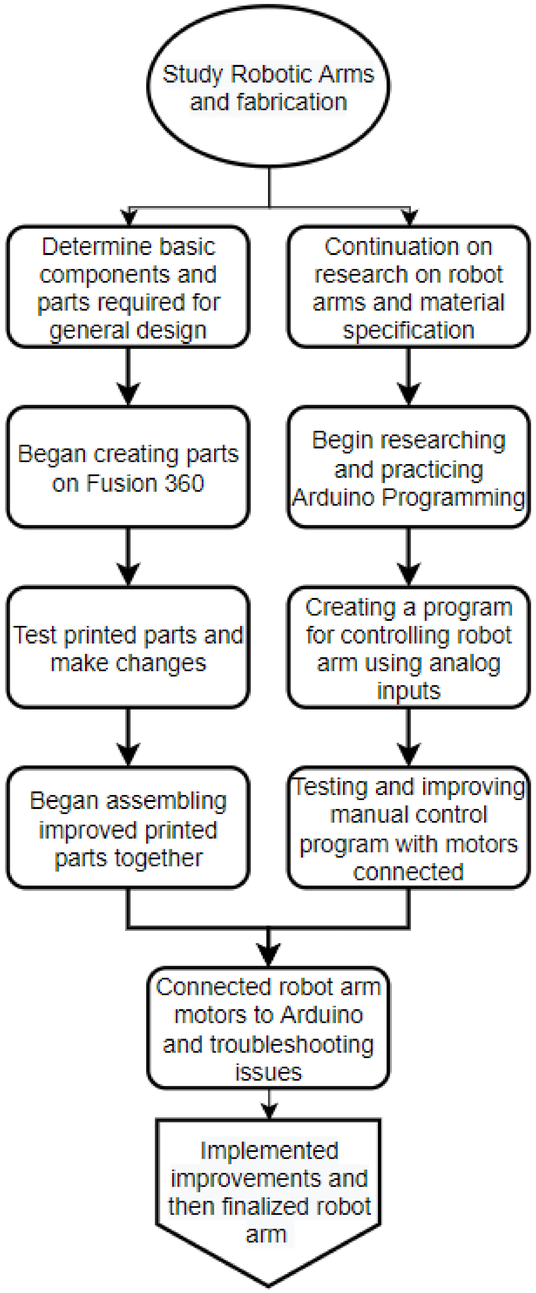

Results

Outcomes:

- Fabricated Robot Arm Prototype from 3D printing
- Can be manually controlled using Analog inputs
- Open to changes from users

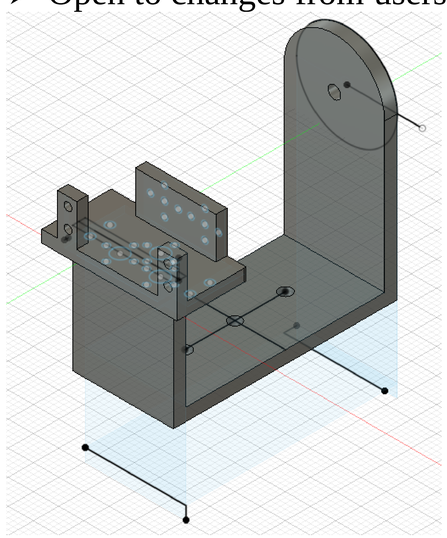

Figure 1: Small U Bracket designed in Fusion 360

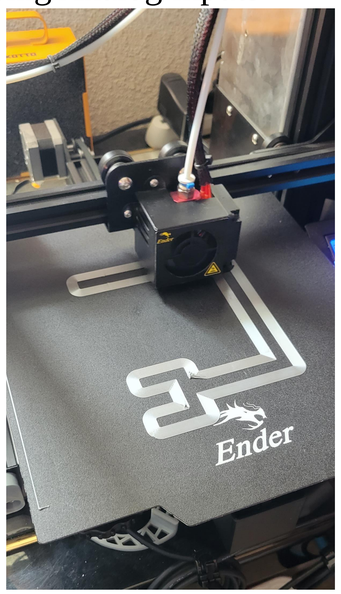

Figure 2: Ender 3 Pro printing designed parts for testing

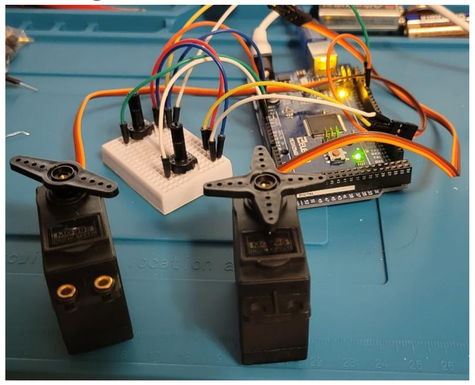

Figure 3: Programming and Testing Arduino code with motors attached

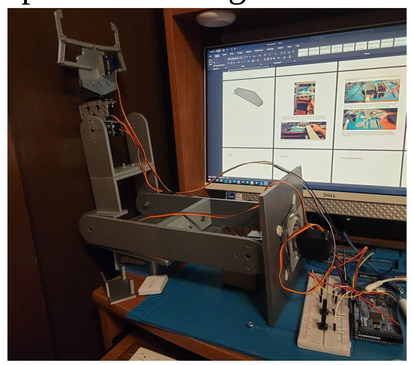

Figure 4: Robot arm fully assembled and programmed

Conclusion

The student achieved their goal by researching fundamental robot arm concepts and then fabricating a robot arm by designing 3D models and 3D printing the components on an Ender 3 Pro. In this project, student learned how to build parts in Fusion 360 software, fabricate robot arms, and program Arduinos for manual controls using analog inputs. The robot arm has completed its base prototype stage and is ready to be altered for future applications. The student intends to refine the robot arm prototype in the future to increase performance and make it easier for other users to implement.

References

[1] AMT 1051 : Introduction to Robotics by AMTEC – Canvas – Neha Kardam ELEC 216

[2] Bélanger-Barrette, Mathieu, and Robotiq Inc. "How Many Axes Does My Robot Need?" *Robohub*, 9 Dec. 2015, robohub.org/how-many-axes-does-my-robot-need/.

[3] UAP Robotics. "Robotic Arms in Manufacturing." *Design Robotics*, 3 Apr. 2018, www.designrobotics.net/robotic-arms-in-manufacturing

[4] Rosales, Eric & Gan, Qiang & Gan, John. (2002). Forward and Inverse Kinematics Models for a 5-dof Pioneer 2 Robot Arm.